THE STATE OF DELAWARE

DEPARTMENT OF TRANSPORTATION

OFFICE OF TRANSPORTATION SOLUTIONS

CONSTRUCTION PLANS AND SPECIFICATIONS FOR

PAVEMENT & REHABILITATION, KENT II, (WHITELEYSBURG & VERNON), 2025

CONTRACT NUMBER - T202506202 **UNIFIER PROJECT ID – 2025-00013**

FEDERAL AID NUMBER - ESTP-2025(06) **COUNTY: KENT**

PLANS PREPARED BY: Paul Faukas

DESIGNER

Sarah McDougall 7/31/2025

DELDOT – TRANSPORTATION SOLUTIONS DATE

PAVEMENT MANAGEMENT - (PM)

SARAH L. MCDOUGALL LICENSED No. 18789 DELAWARE PROFESSIONAL ENGINEER

THIS SEAL APPLIES TO ALL SHEETS BEARING THE "PM" SECTION DESIGNATION

APPROVED FOR ADVERTISEMENT

08/05/2025

DIRECTOR OF TRANSPORTATION SOLUTIONS DATE

Multiple Locations

LOCATION MAP

LOCATION 1
WHITELEYSBURG RD
FROM MARYLAND STATE LINE TO VERNON RD.

LOCATION 2
VERNON RD
FROM WHITELEYSBURG RD TO REESE AVE.

GENERAL CONTRACT PLAN NOTES

REVISED - JULY 2025

GENERAL

1. THIS PROJECT IS TO BE CONSTRUCTED IN ACCORDANCE WITH THE DELAWARE DEPARTMENT OF TRANSPORTATION STANDARD SPECIFICATIONS - **JANUARY 2025** FOR ROAD AND BRIDGE CONSTRUCTION AND THE DELAWARE DEPARTMENT OF TRANSPORTATION STANDARD CONSTRUCTION DETAILS **DATED 2025**, INCLUDING ALL REVISIONS UP TO THE DATE OF ADVERTISEMENT.

2. THE PURPOSE OF THIS CONTRACT IS TO MAKE GENERAL IMPROVEMENTS TO ROADS AND/OR STREETS WITHIN THE DISTRICT HEREIN SPECIFIED. DEPENDING ON FUND AVAILABILITY, THE DEPARTMENT RESERVES THE RIGHT TO ADD OR DELETE LOCATIONS AND/OR QUANTITIES FOR THIS CONTRACT. SUCH LOCATION OR QUANTITY ADDITIONS OR DELETIONS SHALL NOT BE CAUSE FOR AN INCREASE OR DECREASE IN ANY CONTRACT UNIT BID PRICES. NO ITEM PRICES ARE TO BE RENEGOTIATED DUE TO EITHER AN INCREASE OR DECREASE IN QUANTITY USAGE RESULTING FROM SAID ADDITIONS OR DELETIONS.

3. THE CONTRACTOR SHALL PROVIDE ALL RESIDENTS AND BUSINESSES WHO LIVE ADJACENT TO THE WORK ZONE A MINIMUM 48 HR. PRIOR WRITTEN NOTICE FOR THE START OF CONSTRUCTION WORK. THIS NOTIFICATION SHALL INCLUDE THE SCOPE OF WORK, WORKING HOURS, ANTICIPATED START AND COMPLETION DATES, CONTRACTOR NAME & ADDRESS, AND DELDOT CONTACT NUMBERS. FAILURE TO GIVE PROPER NOTICE WILL RESULT IN A SUSPENSION OF WORK REQUIRING NOTICE, UNTIL PROPER NOTICE IS PROVIDED. ACCESS TO ALL BUSINESSES AND RESIDENCES WITHIN THE PROJECT LIMITS SHALL BE MAINTAINED THROUGHOUT THE DURATION OF THIS CONTRACT. ANY TEMPORARY CLOSURE OF A DRIVEWAY FOR TIE-IN PURPOSES SHALL BE COORDINATED WITH THE ENGINEER AND/OR PROPERTY OWNER IN ADVANCE OF THE CLOSURE.

4. THE CONTRACTOR SHALL SUBMIT THE REQUIRED COPIES OF A DETAILED PROGRESS SCHEDULE (PSC) AS OUTLINED IN DELDOT STANDARD SPECIFICATION 108.4 PRIOR TO OR AT THE PRECONSTRUCTION MEETING. DETAILS SHALL INCLUDE A DESCRIPTION OF EACH WORK ACTIVITY, THE PLANNED DAYS OF WORK, MULTIPLE CREWS OR SHIFTS, AND SCHEDULED WORKING HOURS. DURING THE CONTRACT, THE CONTRACT SHALL SUBMIT TWO-WEEK (OR AS REQUIRED) "LOOK AHEAD" SCHEDULES TO THE AREA ENGINEER/ MANAGER NO LATER THAN NOON OF EACH THURSDAY. FAILURE TO COMPLY WILL RESULT IN A SUSPENSION OF ALL CONTRACT WORK WITH TIME CHARGES CONTINUING TO BE ASSESSED.

5. THE CONTRACTOR SHALL BE RESPONSIBLE FOR OBTAINING THE REQUIRED CLEARANCES AND INSURANCES FOR EACH RAILWAY COMPANY INVOLVED IF THE RAILROAD PROPERTY AND/OR FACILITES ARE LOCATED WITHIN OR NEAR THE PROPOSED LIMITS OF WORK AND/OR IF THE PROPOSED WORK ENCROACHES UPON THE

GENERAL CONTRACT PLAN NOTES

RAILROAD'S RIGHT-OF-WAY, IN ACCORDANCE WITH DELDOT MAINTENANCE OF RAILROAD TRAFFIC ITEM NO. 801501. THE CONTRACTOR MUST CONTACT DELDOT'S RAILROAD SECTION MANAGER AT **(302) 659-4098** PRIOR TO ANY WORK STARTED TO COORDINATE THE EXECUTION OF THE APPROPRIATE AGREEMENTS AND AUTHORIZATIONS REQUIRED FROM ANY RAILWAY COMPANY INVOLVED, INCLUDING COORDINATION FOR RAILROAD FLAGGING, IF NECESSARY.

MAINTENANCE OF TRAFFIC

6. PERMANENT ADVANCE WARNING SIGNS WITH THE LEGENDS "ROAD WORK AHEAD" SHALL BE PLACED ON THE APPROACHES TO THE WORK AREA AND "END ROAD WORK" SIGNS SHALL BE PLACED BEYOND THE WORK AREA LIMITS IN BOTH DIRECTIONS. ON ALL INTERSECTING ROADS, INSTALL "ROAD WORK AHEAD" SIGNS 500 FEET IN ADVANCE OF THE WORK AREA AND "END ROAD WORK" SIGNS 500 FEET BEYOND THE WORK AREA**.** THE USE OF SKID-MOUNTED SIGN SUPPORTS IS NOT ALLOWED UNLESS THE CONTRACTOR CAN DEMOSTRATE THAT A UTILITY CONFLICT EXISTS AND/ OR CONCRETE MEDIANS PREVENT THE INSTALLATION OF THE PERMANENT SIGNS IN THE APPROPRIATE LOCATION WHICH SHALL BE VERIFIED BY THE ENGINEER.

7. PORTABLE CHANGEABLE MESSAGE SIGNS (PCMS) SHALL BE PLACED IN BOTH DIRECTIONS 10 DAYS IN ADVANCE OF CONSTRUCTION THROUGH 5 DAYS AFTER THE START OF CONSTRUCTION, AS WELL AS PRIOR TO ANY MAJOR TRAFFIC PATTERN CHANGES. ALL PCMS MESSAGES AND LOCATIONS SHALL BE APPROVED BY THE DISTRICT SAFETY OFFICER.

8. THE CONTRACTOR SHALL BE REQUIRED TO SHOW PROOF THAT HE HAS SUFFICIENT APPROVED STRIPING MATERIALS ON HAND TO ENSURE STRIPING IS COMPLETED PRIOR TO FULL OPENING ROADWAY TO TRAFFIC.

9. AT THE END OF EACH DAY'S OPERATION AND BEFORE TRAFFIC IS RETURNED TO UNRESTRICTED ROADWAY USE, TEMPORARY STRIPING SHALL BE APPLIED AT LOCATIONS THAT REQUIRE PERMANENT STRIPING AND IN ACCORDANCE WITH THE TEMPORARY PAVEMENT MARKING POLICY. TEMPORARY PAVEMENT STRIPING MUST MATCH PERMANENT PAVEMENT STRIPING IN ALL REGARDS. THE CONTRACTOR IS RESPONSIBLE FOR MAINTAINING THE TEMPORARY MARKINGS IN GOOD CONDITION SUCH THAT THE PAVEMENT IS PROPERLY DELINEATED AT ALL TIMES. ANY REFRESHING OF THE TEMPORARY MARKINGS WILL BE AT THE CONTRACTOR'S EXPENSE.

10. ALL WORK SHALL BE PERFORMED IN A MANNER THAT WILL REASONABLY PROVIDE THE LEAST PRACTICABLE OBSTRUCTION TO ALL ROAD USERS, INCLUDING VEHICULAR, PEDESTRIAN AND BICYCLE TRAFFIC, AND SHALL CONFORM TO THE REQUIREMENTS OF THE 2011 DELAWARE MANUAL ON UNIFORM

GENERAL CONTRACT PLAN NOTES

TRAFFIC CONTROL DEVICES, PART 6, INCLUDING ALL REVISIONS UP TO THE DATE OF ADVERTISEMENT FOR BIDS.

11. THE CONTRACTOR SHALL MAINTAIN ACCESS TO AND ALONG PEDESTRIAN FACILITIES AT ALL TIMES DURING CONSTRUCTION. EARTH, STONE AND GRAVEL SURFACES ARE NOT ACCEPTABLE FOR PROVIDING PEDESTRIAN ACCESS. WHERE PEDESTRIAN ROUTES ARE CLOSED OR BLOCKED, ALTERNATE PEDESTRIAN ACCESS SHALL BE PROVIDED USING TA-28 AND/OR TA-29 OF THE 2011 DELAWARE MANUAL ON UNIFORM TRAFFIC CONTROL DEVICES. PEDESTRIAN DETOUR ROUTES OR ALTERNATE PEDESTRIAN FACILITIES SHALL CONSIST OF ADA COMPLIANT FACILITIES TO THE LEVEL OF WHICH EXISTS ON THE PEDESTRIAN ROUTE. THIS WORK SHALL BE INCIDENTAL TO ITEM 801500 - MAINTENANCE OF TRAFFIC, ALL INCLUSIVE.

PEDESTRIAN MAINTENANCE OF TRAFFIC: THIS WORK SHALL CONSIST OF PROVIDING AND MAINTAINING AN ACCESSIBLE PEDESTRIAN ROUTE THROUGHOUT THE PROJECT'S LIMITS IN ACCORDANCE WITH THE AMERICANS WITH DISABILITIES ACT OF 1990 (ADA) TITLE II, PARAGRAPH 35.130.

THE CONTRACTOR SHALL BE REQUIRED TO REVIEW EACH CURB RAMP LOCATION AND SUBMIT THE APPROPRIATE MAINTENANCE OF TRAFFIC DETAIL AND LIST OF DEVICES TO THE ENGINEER FOR EACH LOCATION AT LEAST 2 WEEKS PRIOR TO THE START OF CONSTRUCTION FOR REVIEW, COMMENT, AND APPROVAL.

THE FOLLOWING CONSIDERATIONS SHALL BE TAKEN INTO ACCOUNT WHEN ADDRESSING ACCESSIBLE PEDESTRIAN MAINTENANCE OF TRAFFIC:

- ALL PEDESTRIANS, INCLUDING PERSONS WITH DISABILITIES, SHALL BE PROVIDED WITH A REASONABLY SAFE, CONVENIENT AND ACCESSIBLE PATH THAT REPLICATES AS MUCH AS PRACTICABLE, THE EXISTING PEDESTRIAN FACILITIES.
- PROVIDE PEDESTRIAN ACCESS THROUGH OR AROUND THE WORK ZONE. IF A DETOUR IS CHOSEN, THE CONTRACTOR MUST SUBMIT THE DETOUR ROUTE TO THE ENGINEER FOR REVIEW AND APPROVAL. THE DETOUR ROUTE MUST MEET OR EXCEED THE CURRENT CONDITIONS.
- PHASE WORK SO THAT ALL AREAS OF AN INTERSECTION/SIDEWALK PATH ARE NOT UNDER CONSTRUCTION AT THE SAME TIME UNLESS A CLEAR PATH IS PROVIDED AND IDENTIFIED.
- TRAFFIC CONTROL DEVICES AND OTHER CONSTRUCTION MATERIALS AND FEATURES SHALL NOT INTRUDE INTO THE USABLE WIDTH OF THE SIDEWALK, TEMPORARY PATHWAY OR OTHER PEDESTRIAN FACILITY.

A SMOOTH, CONTINUOUS HARD SURFACE SHALL BE PROVIDED THROUGHOUT THE ENTIRE LENGTH AND WIDTH OF THE PEDESTRIAN ROUTE THROUGHOUT CONSTRUCTION. THERE SHALL BE NO CURBS OR VERTICAL

GENERAL CONTRACT PLAN NOTES

ELEVATION CHANGES GREATER THAN ¼ IN. IN GRADE OR TERRAIN THAT COULD CAUSE TRIPPING OR BE A BARRIER TO WHEELCHAIR USE.

12. THE USE OF MILLINGS AND GRADED AGGREGATE BASE COURSE (GABC) IN THE TRAVEL WAY, TEMPORARY TRAVEL WAY, HIGH VOLUME ENTRANCES AND ACCESS RAMP FOR THE PURPOSE OF PROVIDING A TEMPORARY ROADWAY SURFACE, POTHOLE REPAIR, TAPERED EDGE FOR UTILITIES, BUTT JOINTS, AND LONGITUDINAL DROP-OFFS (MILLING AND PAVING OPERATIONS) IS PROHIBITED UNLESS IT IS OTHERWISE DESIGNATED TO BE USED IN THE CONTRACT PLANS. USE COLD PATCH, BITUMINOUS CONCRETE, BITUMINOUS CONCRETE WEDGE, OR TAPER MILL, AS NOTED IN THE CONTRACT DOCUMENTS OR APPROVED BY THE ENGINEER. PAYMENT FOR COLD PATCH, BITUMINOUS CONCRETE OR BITUMINOUS CONCRETE WEDGE SHALL BE PAID AS NOTED IN THE CONTRACT DOCUMENTS. TAPER MILL BITUMINOUS CONCRETE SHALL BE PAID UNDER THE BITUMINOUS CONCRETE MILLING ITEM.

MILLINGS OR GABC SHALL BE USED AT THE FOLLOWING LOCATIONS WHERE ACCESS TO A BUSINESS, RESIDENCE, OR EDGE DROP OFF NEEDS TO BE MAINTAINED UNLESS OTHERWISE NOTED IN THE PLANS OR DIRECTED BY THE ENGINEER TO USE BITUMINOUS CONCRETE OR COLD PATCH. ALL MILLINGS AND GABC WILL BE ROLLED AND COMPACTED TO HELP PREVENT THE MATERIAL FROM UNRAVELLING:

a. DRIVEWAYS
b. ENTRANCES
c. LOW VOLUME ACCESS RAMPS (IDENTIFIED IN THE CONTRACT DOCUMENTS)
d. EDGE DROP-OFFS ADJACENT TO LIVE ROADWAY(LANES AND SHOULDER) AND THE PROPOSED ROAD CONSTRUCTION
e. EDGE OF ROADWAY DROP-OFF

GRADING AND MAINTAINING BASE COURSE THAT IS BEING USED FOR ROADWAY WEDGE/FILLET BETWEEN TRAVEL LANES AND PAVEMENT BOX, EDGE OF TRAVELWAY, DRIVEWAY OR ENTRANCE ACCESS SHALL BE INCIDENTAL TO ITEM NO. 801500 - MAINTENANCE OF TRAFFIC. THE BASE COURSE MATERIAL SHALL BE PLACED AT NO GREATER THAN THE SLOPE SPECIFIED IN TABLE 6G-1 AND SHALL BE COMPACTED. EXCESS BASE COURSE MATERIAL SHALL BE PUSHED AHEAD AND USED IN THE NEXT SEGMENT AND SHALL BE INCIDENTAL TO THE PARTICULAR BASE COURSE PAY ITEM. NO SEPARATE PAYMENT SHALL BE MADE FOR MILLINGS OR GABC TEMPORARY ROADWAY MATERIAL (TRM) USED TO PROTECT EDGE DROP-OFFS, UNLESS THE MATERIAL IS EVENTUALLY UTILIZED AS PART OF A PERMANENT ROADWAY AT WHICH TIME THE MATERIAL WOULD BE PAID FOR UNDER THE RESPECTIVE CONTRACT MATERIAL ITEM.

VERTICAL DIFFERENCES SHALL BE CORRECTED IN ACCORDANCE WITH TABLE 6G-1 OF THE DELAWARE MUTCD.

GENERAL CONTRACT PLAN NOTES

13. **THE CONTRACTOR SHALL HAVE AN ATSSA SUPERVISOR ASSIGNED TO THIS PROJECT AND THAT PERSON'S SOLE RESPONSIBILITY SHALL BE THE MANAGEMENT AND SUPERVISION OF THE PROJECT'S TEMPORARY TRAFFIC CONTROL ACTIVITIES. THIS PERSON SHALL NOT HAVE ANY OTHER ROLE ON THE PROJECT. RESPONSIBILITIES AND REQUIREMENTS OF THE ATSSA SUPERVISOR ARE DEFINED IN SECTION 812 OF THE STANDARD SPECIFICATIONS. PAYMENT FOR ATSSA SUPERVISOR IS INCIDENTAL TO ITEM 801500.**

PAVEMENT MARKINGS

14. APPROVED SIGNING AND STRIPING PLANS WILL BE PROVIDED BY THE DEPARTMENT THROUGH THE TRAFFIC DESIGN SECTION. IF ANY CHANGES TO THE FINAL PAVEMENT MARKINGS ARE REQUIRED THEY WILL NEED TO BE SUBMITTED AND REVIEWED BY THE DEPARTMENT'S TRAFFIC SECTION FOR APPROVAL. FINAL PAVEMENT MARKINGS SHALL CONFORM TO THE APPROVED SIGNING AND STRIPING PLANS UNLESS OTHERWISE DIRECTED BY THE ENGINEER.

UNLESS OTHERWISE DIRECTED BY THE ENGINEER, WHITE EDGE LINES SHALL WRAP AROUND THE RADIUS OF ALL SIDE STREETS AND MAJOR COMMERCIAL ENTRANCES TO A TANGENT POINT. YELLOW CENTERLINES SHALL BE CONTINUOUS AROUND MEDIAN ISLANDS. ALL DOUBLE YELLOW CENTERLINES SHALL BE PLACED IN A 6-6-6 CONFIGURATION (2 EACH, 6" YELLOW STRIPES WITH A 6" GAP BETWEEN).

15. ANY ERRONEOUS MARKING WILL NOT BE PAID FOR AND SHALL BE CORRECTED IMMEDIATELY AT THE CONTRACTORS EXPENSE. ERRONEOUS MARKINGS OR SHADOWS THAT EXCEED ONE (1) INCH IN WIDTH SHALL BE REMOVED BY EITHER SAND OR WATER BLASTING AS DIRECTED BY THE ENGINEER. NO OTHER REMOVAL METHODS WILL BE ALLOWED. A FLAT BLACK PAINT OR DRIVEWAY SEALER SHALL BE APPLIED IN THE AREA OF THE REMOVED MARKING TO MASK THE REPAIR. ANY DAMAGE TO THE PAVEMENT CAUSED BY REMOVAL OF ERRONEOUS MARKINGS SHALL BE REPAIRED / REPLACED TO THE SATISFACTION OF THE ENGINEER AT THE CONTRACTORS EXPENSE.

16. STOP LINES "BARS" SHALL BE INSTALLED IN ACCORDANCE WITH SECTION 3B.16 OF THE 2011 DELAWARE MUTCD.

17. ALL CROSSWALKS SHALL BE INSTALLED IN ACCORDANCE WITH SECTION 3B.18 OF THE 2011 DELAWARE MUTCD.

GENERAL CONTRACT PLAN NOTES

TRAFFIC SIGNAL NOTES

18. TRAFFIC DETECTION LOOPS SHALL BE PLACED IN THE FINAL WEARING SURFACE UNLESS OTHERWISE DIRECTED BY THE ENGINEER.

19. TRAFFIC DETECTION LOOPS THAT ARE CURRENTLY 5'x7' SHALL BE REPLACED WITH LOOPS THAT ARE 6'x6' AT THE SAME LOCATION. STOP BAR DETECTION LOOPS SHALL BE THE SAME SIZE AS CURRENTLY EXISTING, AND SHOULD BE PLACED STARTING TWO FEET BEHIND THE STOP BAR, UNLESS OTHERWISE DIRECTED BY THE ENGINEER. IF SEPARATE SIGNAL PLANS HAVE BEEN DEVELOPED, THE PLANS SUPERSEDE THIS NOTE.

PROJECT

20. UNLESS SPECIFIED, OVERLAY WIDTHS SHALL MATCH EXISTING WIDTHS.

21. THE COST OF CLIPPING BACK THE EDGES OF THE ROADWAY, SHOULDERS, AND THE FIRST 3' OF UNPAVED DRIVEWAY ENTRANCES, PICKING UP AND DISPOSING OF WASTE AND EXCESS MATERIAL, AND CLEANING THE EXISTING PAVEMENT PRIOR TO OVERLAY SHALL BE INCIDENTAL TO THE PAVING ITEMS. PREPARING UNPAVED DRIVEWAY ENTRANCES BEYOND THE FIRST 3' SHALL BE PAID UNDER THE APPROPRIATE CONTRACT ITEMS: 202000 AND/OR 301003.

22. BUTT JOINTS SHALL BE PLACED AT ALL INTERSECTING HOT MIX ROADS AND ANY OTHER LOCATIONS AS DIRECTED BY THE ENGINEER. BUTT JOINTS AT DRAINAGE STRUCTURES NOT TO BE RESURFACED SHALL BE AS PER THE INCLUDED PLAN DETAIL OR LOCATION NOTES. BUTT JOINTS CUT PRIOR TO THE DAY OF THE PAVEMENT OVERLAY SHALL BE RAMPED WITH HOT MIX TRM. IN MILLING AREAS, THERE WILL BE NO SEPARATE PAYMENT FOR BUTT JOINTS. AFTER PAVEMENT MILLING, ALL TRANSVERSE VERTICAL DIFFERENCES, RAISED EDGES OF MANHOLES, CATCH BASINS, WATER VALVE BOXES, ETC...SHALL BE RAMPED WITH HOT-MIX TRM AT A 20:1 OR FLATTER SLOPE PRIOR TO OPENING THE ROADWAY TO TRAFFIC. PAVEMENT MILLINGS WILL NOT BE ALLOWED FOR USE AS RAMPING MATERIAL.

23. TAPER MILLING IS INTENDED FOR MILLING IN THE AREA OF FIXED STRUCTURES (I.E. CURBS GUARDRAIL, ETC.) THE MILLED DEPTH AT THE STRUCTURE SHALL BE THE DEPTH OF THE PROPOSED OVERLAY AND 0" AT A DISTANCE OF 6½' +/- FROM THE STRUCTURE. THE COMPUTED DEPTH FOR PAYMENT PURPOSES IS THE AVERAGE OF THE TWO DEPTHS.

GENERAL CONTRACT PLAN NOTES

24. MILLING OF THE BITUMINOUS ASPHALT PAVEMENT IN PREPARATION FOR THE OVERLAY SHALL INCLUDE MILLING OF EXISTING CONCRETE PATCHES AND/OR COMPOSITE PAVEMENT AND IS INCIDENTAL TO ITEM 76001X, PAVEMENT MILLING, BITUMINOUS CONCRETE PAVEMENT.

25. ALL MILLED MATERIAL SHALL REMAIN THE PROPERTY OF THE CONTRACTOR UNLESS OTHERWISE STATED.

26. EXCAVATION FOR P.C.C. CURBS, SIDEWALK OR VALLEY GUTTER SHALL BE INCIDENTAL TO THE RESPECTIVE ITEMS. EXCAVATED MATERIAL, NOT NEEDED ON THE PROJECT, SHALL BE REMOVED FROM THE PROJECT SITE AT THE CONTRACTORS EXPENSE. ITEM 908001 - TOPSOIL, SHALL BE USED AS BACKFILL MATERIAL FOR CURB AND SIDEWALK AS DIRECTED BY THE ENGINEER. TOPSOIL SHALL BE SCREENED/SIFTED SO AS NO MATERIAL GREATER THAN .5" IS PRESENT IN MATERIAL USED FOR BACKFILL. AT EACH LOCATION, BACKFILLING SHALL BE PERFORMED IMMEDIATELY UPON REMOVAL OF FORMS FOR CURB OR SIDEWALK WORK. COMPLETE RESTORATION, TOPSOIL, SEEDING, AND REMOVAL OF ALL MATERIALS FOR CURB & GUTTER OR SIDEWALK; SEALING OF VALLEY GUTTERS AND PARGING OF CATCH BASINS, SHALL BE COMPLETED WITHIN SEVEN (7) CALENDAR DAYS OF COMPLETION OF THE ITEM OF WORK. FAILURE TO COMPLY WILL RESULT IN A SUSPENSION OF ALL OTHER CONTRACT WORK WITH TIME CHARGES CONTINUING TO BE ASSESSED.

27. ALL ADJUSTMENTS SHALL BE MADE NO MORE THAN SEVEN (7) CALENDAR DAYS PRIOR TO THE PLACEMENT OF THE FINAL COURSE OF HOT MIX UNLESS OTHERWISE APPROVED BY THE ENGINEER. FAILURE TO COMPLY WILL RESULT IN A SUSPENSION OF ALL OTHER CONTRACT WORK WITH TIME CHARGES CONTINUING TO BE ASSESSED.

28. ALL PAVING, INCLUDING TURN LANES, SHOULDERS AND INTERSECTIONS, IS TO BE COMPLETED WITHIN SEVEN (7) CALENDAR DAYS FROM THE TIME THE AREA WAS MILLED. FAILURE TO COMPLY WILL RESULT IN A SUSPENSION OF ALL OTHER CONTRACT WORK WITH TIME CHARGES CONTINUING TO BE ASSESSED.

29. THE CONTRACTOR SHALL TAKE CARE IN REMOVING PAVEMENT AROUND UTILITIES, BUTT JOINTS, CURBING, ETC. SO THAT EXISTING PAVEMENT BEYOND THE SPECIFIED DEPTHS IS NOT DAMAGED. ANY DAMAGE CAUSED BY THE CONTRACTOR'S OPERATIONS MAY RESULT IN PLACING LEVELING COURSES AT THE CONTRACTOR'S EXPENSE. THE REMOVAL AND CLEAN UP OF THE HOT MIX RESIDUE WEDGE REMAINING AFTER MILLING OPERATIONS SHALL BE INCIDENTAL TO THE MILLING ITEM. THE REMOVAL OF EXISTING RAISED PAVEMENT MARKERS (RPM'S) SHALL BE INCIDENTAL TO THE APPLICABLE MILLING AND/OR RECLAMATION ITEMS.

GENERAL CONTRACT PLAN NOTES

30. ALL PORTLAND CEMENT CONCRETE MUST BE RECEIVED FROM AN APPROVED PRODUCTION PLANT. ONLY CALIBRATED VOLUMETRIC CONCRETE TRUCKS WILL BE PERMITTED TO PROVIDE ON-SITE MIXTURES. THIS PERTAINS TO BOTH WORK OCCURRING DURING NORMAL WORKING HOURS AND NIGHTTIME RESTRICTED WORK.

31. ALL DRAINAGE INLETS WHICH ARE SLATED FOR REPAIR WILL HAVE THE FLOW CHANNEL INSTALLED AND DRAINAGE INLETS 4' OR GREATER IN DEPTH WILL ALSO HAVE THE STEPS INSTALLED IN ACCORDANCE WITH SECTION 602.3.B.8 OF THE STANDARD SPECIFICATIONS. PAYMENT SHALL BE INCIDENTAL TO THE UNIT PRICE BID FOR ITEM 602130 AND/OR 602504.

32. THE PORTLAND CEMENT CONCRETE USED WITHIN ITEM 602132 - ADJUST AND REPAIR EXISTING MANHOLES AND ITEM 710002 - ADJUST WATER VALVE BOX SHALL CONFORM TO THE REQUIREMENTS OF CLASS A CONCRETE AS STATED WITHIN SECTION 1022 OF THE DEPARTMENT'S STANDARD SPECIFICATIONS.

33. In order to maintain effective communication with the traveling public, only place signs, banners, flags, or other displays within the projects limits that meet the requirements of the latest version of the Delaware Manual on Uniform Traffic Control Devices. Any signs or other materials which deviate from the MUTCD, must be preapproved by the Engineer. The only signage and materials which may be displayed upon vehicles and equipment within the Project area are signs denoting the name of the Contractor and any subcontractors and other signs and/or materials required and approved pursuant to the MUTCD and the Engineer. Contractor shall immediately remove any signs or materials within the Project that does not meet these requirements immediately upon notification by the Engineer. Failure to remove signs or other materials following notification from the Engineer will result in Liquidated Damages being assessed in the manner and amount specified in the Standard Specifications section 108.9A.

CENTRAL MAINTENANCE Multiple Locations

DETAILS SHEET

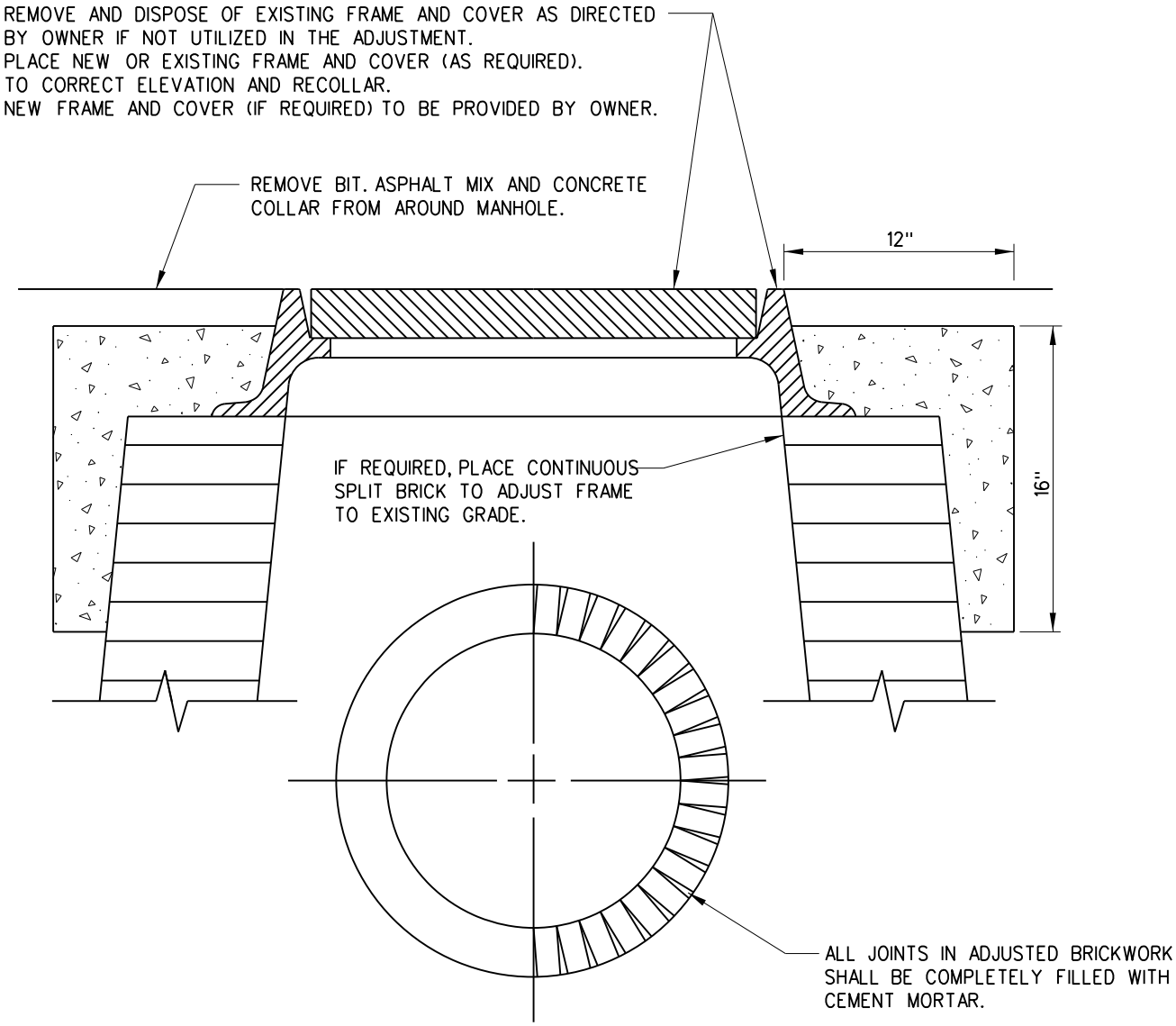

ADJUSTING AND REPAIRING MANHOLE

N.T.S.

NOTES:
1. MANHOLES IN CONCRETE ROADWAYS SHALL BE SAWCUT FULL DEPTH TO THE SPECIFIED DIMENSION PRIOR TO ANY ADJUSTMENT BEING MADE. THE SAWCUTTING SHALL BE INCIDENTAL TO ITEM 602132.
2. ANY ADJUSTMENTS AND/OR RELOCATIONS OF MUNICIPALLY OWNED SEWER OR WATER FACILITIES SHALL BE DONE IN ACCORDANCE TO THE RESPECTIVE AGENCIES STANDARD SPECIFICATIONS AS DIRECTED BY THE ENGINEER.

DETAILS SHEET

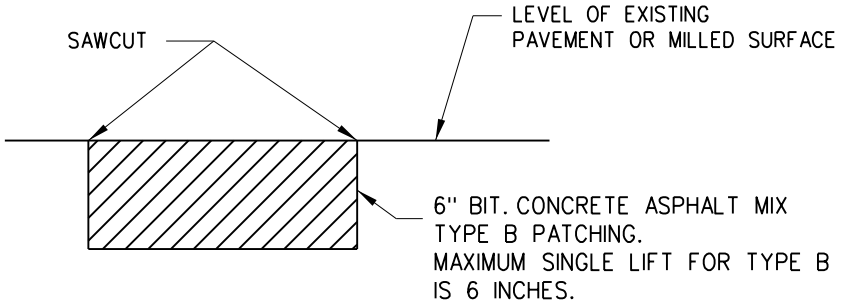

BITUMINOUS CONCRETE MIX PATCH DETAIL

N.T.S.

NOTE: ALL EDGES TO BE SAWCUT. CUTTING BY USE OF AIR HAMMERS MAY BE SUBSTITUTED FOR SAWCUTTING IF THE AREA IS TO BE OVERLAID UNDER THE SAME CONTRACT. THIS DETAIL SHALL BE USED FOR ALL HOT-MIX PATCHES UNLESS OTHERWISE SHOWN ON THE PLANS.

CENTRAL MAINTENANCE Multiple Locations

DETAILS SHEET

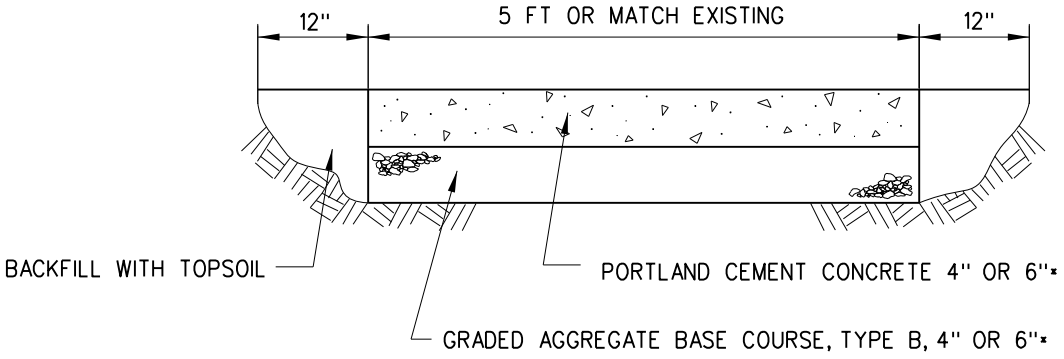

P.C.C. SIDEWALK

N.T.S.

* **NOTE:** 6" CONCRETE OVER 6" GRADED AGGREGATE TO BE USED FOR DRIVEWAY PLACEMENT

CENTRAL MAINTENANCE Multiple Locations

DETAILS SHEET

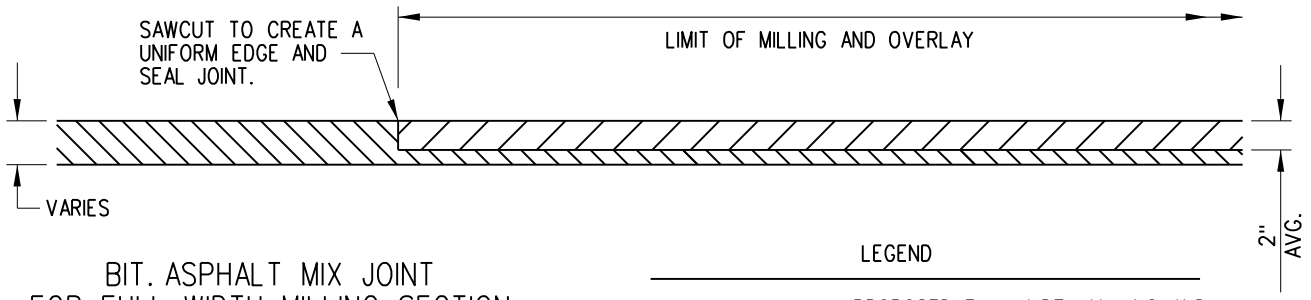

BIT. ASPHALT MIX JOINT FOR FULL WIDTH MILLING SECTION

1. SAWCUT SHALL BE PAID UNDER ITEM 76200X.
2. JOINT SEALING SHALL BE PAID UNDER ITEM 404001.

LEGEND

- PROPOSED FULL WIDTH MILLING AND BIT. ASPHALT MIX OVERLAY
- EXISTING PAVEMENT (TO REMAIN)

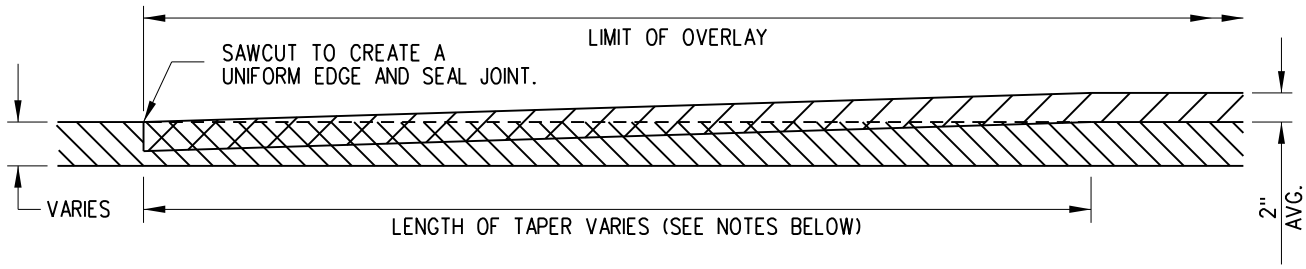

BIT. ASPHALT MIX JOINT FOR OVERLAY SECTION

1. SAWCUT SHALL BE PAID UNDER ITEM 76200X.
2. JOINT SEALING SHALL BE PAID UNDER ITEM 404001.

LEGEND

- PROPOSED OVERLAY
- EXISTING PAVEMENT
- EXISTING PAVEMENT TO BE REMOVED

NOTES:

THE FOLLOWING LENGTHS ARE BASED ON THE POSTED SPEED OF THE ROADWAY:

1. EQUAL TO OR GREATER THAN 55 MPH = 40 FT PER 1" OF OVERLAY DEPTH.
2. LESS THAN 55 MPH = 30 FT PER 1" OF OVERLAY DEPTH.
3. AT STOP SIGNS = 15 FT PER 1" OF OVERLAY DEPTH.

BITUMINOUS ASPHALT MIX JOINT DETAILS

CENTRAL MAINTENANCE PAVEMENT & REHABILITATION, KENT II, (WHITELEYSBURG & VERNON), 2025

LOCATION 1 **WHITELEYSBURG RD (K59) FROM MARYLAND STATE LINE TO VERNON RD (K60)**

LENGTH 12728.4480 m 41760.0000 L.F. AADT 1923

GENERAL IMPROVEMENTS

2" MILL, PAVEMENT PATCHING AND 2" TYPE C (CARB) FULL WIDTH OVERLAY.

COMMENTS:

Please see attached sheets for comments

MATERIAL ESTIMATE FOR LOCATION 1

202000	EXCAVATION AND EMBANKMENT	11.00	C.Y.
211001	REMOVAL OF PORTLAND CEMENT CONCRETE PAVEMENT, CURB AND SIDEWALK	7.00	S.Y.
301001	GABC	1.00	C.Y.
301003	GABC	80.00	TON
401005	SUPERPAVE TYPE C, 9.5 mm, PG 64-22 (CARBONATE STONE)	14,560.00	TON
401030	SUPERPAVE TYPE B, PG 64-22, PATCHING	23.00	TON
401600	HMA/WMA ENVIRONMENTAL PRODUCT DECLARATION (EPD)	1.00	L.S.
401690	ENTRANCE, DRIVEWAY, AND INTERSECTING STREET PAVING AND MILLING SURCHARGE	362.00	TON
403000	BITUMINOUS CONCRETE AND/OR COLD-LAID BITUMINOUS (TRM) CONCRETE	121.00	TON
404001	BITUMINOUS CRACK AND JOINT SEALING LESS THAN 3/4-INCH WIDE	4,730.00	L.F.
705002	PCC SIDEWALK, 6"	63.00	S.F.
760010	PAVEMENT MILLING, BITUMINOUS CONCRETE PAVEMENT	241,280.00	SY-IN
762000	SAW CUTTING, BITUMINOUS CONCRETE	4,730.00	L.F.
762001	SAW CUTTING, CONCRETE, FULL DEPTH	20.00	L.F.
803001	PROVIDE AND MAINTAIN PORTABLE CHANGEABLE MESSAGE SIGN	280.00	EA-DY
808002	PROVIDE AND MAINTAIN TRUCK MOUNTED ATTENUATOR, TYPE II	80.00	EA-DY
811002	FLAGGER, KENT COUNTY	1,600.00	HOUR
811014	FLAGGER, KENT COUNTY, OVERTIME	240.00	HOUR
818001	SUPPLY OF ROADSIDE FLAT SHEET ALUMINUM SIGN PANEL, TYPE IV, RETROREFLECTIVE SHEETING	288.00	S.F.
818003	SUPPLY OF ROADSIDE FLAT SHEET ALUMINUM SIGN PANEL, TYPE XI, RETROREFLECTIVE SHEETING	132.00	S.F.

CENTRAL MAINTENANCE PAVEMENT & REHABILITATION, KENT II, (WHITELEYSBURG & VERNON), 2025

LOCATION 1 **WHITELEYSBURG RD (K59) FROM MARYLAND STATE LINE TO VERNON RD (K60)**

LENGTH 12728.4480 m 41760.0000 L.F. AADT 1923

GENERAL IMPROVEMENTS

2" MILL, PAVEMENT PATCHING AND 2" TYPE C (CARB) FULL WIDTH OVERLAY.

COMMENTS:

Please see attached sheets for comments

MATERIAL ESTIMATE FOR LOCATION 1

819001	PROVIDE GALVANIZED TELESCOPING SIGN POST	36.00	EACH
819002	INSTALL OR REMOVE GALVANIZED TELESCOPING SIGN POST	68.00	EACH
819003	INSTALL OR REMOVE TRAFFIC SIGNS	149.00	EACH
860004	TEMPORARY MARKINGS, LATEX, 4"	263,162.00	L.F.
860007	TEMPORARY PAVEMENT STRIPING, LATEX, SYMBOL/LEGEND	968.00	S.F.
861001	PERMANENT PAVEMENT STRIPING, EPOXY RESIN PAINT, 6"	131,581.00	L.F.
862006	PERMANENT PAVEMENT STRIPING, ALKYD-THERMOPLASTIC, SYMBOL/LEGEND	484.00	S.F.
867001	SNOWPLOWABLE RAISED PAVEMENT MARKER	606.00	EACH
908001	TOPSOIL	1,305.00	TON
908014	PERMANENT GRASS SEEDING, DRY GROUND	13,920.00	S.Y.
908026	EROSION CONTROL MULCH	13,920.00	S.Y.

LOCATION 1 WHITELEYSBURG RD (K59) FROM MARYLAND STATE LINE TO VERNON RD (K60)

COMMENTS:

1. RECOMMENDED M.O.T. TYPICAL APPLICATION, TA-10 (TRAVEL LANES).
   TYPICAL APPLICATION, TA-17A OR 17B (STRIPING).

2. DAYTIME WORK HOURS: 8:00A - 4:00P, (MONDAY AM - FRIDAY PM).

3. EXISTING R.O.W FOR THIS LOCATION IS 60' AS PER ARCHIVE PLANS;
   A. 1503

4. THE GABC ITEM 301003 AND QUANTITY IS FOR UNIMPROVED DRIVEWAYS. CRUSHED CONCRETE AND MILLINGS SHALL NOT BE PERMITTED AS A SUBSTITUTE.

5. PLACE BITUMINOUS ASPHALT CONCRETE SAFETY EDGE AS PER THE STANDARD CONSTRUCTION DETAILS.

6. THE REMOVAL OF EXISTING RAISED PAVEMENT MARKERS SHALL BE INCIDENTAL TO THE MILLING OPERATION.

7. ALL PAVEMENT VERTICAL DIFFERENCES MUST BE ADDRESSED AT THE END OF EACH DAY IN ACCORDANCE WITH THE DELAWARE MANUAL ON TRAFFIC CONTROL DEVICES (DE-MUTCD-2011), CHAPTER 6, PAGE 6G-14, SECTION 6G.20 - VERTICAL DIFFERENCES.

8. INSTALL RAISED PAVEMENT MARKERS AS PER THE DELAWARE MANUAL ON TRAFFIC CONTROL DEVICES (DE-MUTCD-2011), CHAPTER 3, PAGE 3B-48, SECTION 3B-11 - RAISED PAVEMENT MARKERS - GENERAL.

9. THE PROJECT MILLING AND PAVING LIMITS WILL SKIP OVER THE PCC BRIDGE DECK AND WILL TIE INTO THE EXISTING APPROACHES/PAVEMENT JOINTS.

10. MILLINGS NOTE

   A. THE CONTRACTOR SHALL DELIVER 2500 TONS OF MILLED MATERIAL TO THE DESIGNATED LOCATION BELOW, DELIVERY WILL BE INCIDENTAL TO ITEM 760010.

   B. THE MILLINGS SHALL NOT CONTAIN MATERIAL GREATER THAN 1.5 INCHES IN DIAMETER, ANY LOADS WITH MATERIAL GREATER THAN 1.5 INCHES WILL NOT BE ACCEPTED.

   C. THE CONTRACTOR SHALL CONTACT AND NOTIFY THE SUPERINTENDENT ONE (1) WEEK PRIOR TO COORDINATE DELIVERY.

DELDOT MAINTENANCE - AREA 21
MAGNOLIA YARD
1229 BRIARBUSH RD
MAGNOLIA, DE 19962

SUPERINTENDENT: DUWAYNE SHAFFER, 302-632-2599.

LOCATION 1 WHITELEYSBURG RD (K59) FROM MARYLAND STATE LINE TO VERNON RD (K60)

10. INTERSECTING ROADS

A. THE FOLLOWING LOCATIONS WILL REQUIRE 2" MILLING BACK TO THE PAVEMENT JOINT AND/OR AS DIRECTED BY THE FIELD ENGINEER;(LENGTHS ARE APPROX.)

- PINE PITCH RD - 50'
- BROWNSVILLE RD - 60'
- WOLFPIT RIDGE - 40'
- FOX HUNTERS RD(2X) - 30'
- SUGAR STICK RD - 30'
- MURFFS RD - 20'
- RED BIRD RD - 20'
- BULLOCK RD - 30'
- INGRAM BRANCH RD -30'

THIS LOCATION SHALL MEET THE TOLERANCES OF SUBSECTION 401580 - RIDE QUALITY OF HOT-MIX PAVEMENT REQUIREMENTS, AS SPECIFIED IN THE SPECIAL PROVISIONS.

CENTRAL MAINTENANCE PAVEMENT & REHABILITATION, KENT II, (WHITELEYSBURG & VERNON), 2025

LOCATION 2 **VERNON RD (K60) FROM WHITELEYSBURG RD (K59) TO REESE AVE.**

LENGTH 1438.6560 m 4720.0000 L.F. AADT 6136

GENERAL IMPROVEMENTS

ADA IMPROVEMENTS, 2" MILL, PAVEMENT PATCHING AND 2" TYPE C FULL WIDTH OVERLAY.

COMMENTS:

Please see attached sheets for comments

MATERIAL ESTIMATE FOR LOCATION 2

201000	CLEARING AND GRUBBING	1.00	L.S.
202000	EXCAVATION AND EMBANKMENT	111.00	C.Y.
211001	REMOVAL OF PORTLAND CEMENT CONCRETE PAVEMENT, CURB AND SIDEWALK	186.00	S.Y.
301001	GABC	26.00	C.Y.
301002	GABC, PATCHING	12.00	C.Y.
301003	GABC	24.00	TON
401005	SUPERPAVE TYPE C, 9.5 mm, PG 64-22 (CARBONATE STONE)	1,162.00	TON
401029	SUPERPAVE TYPE C, 9.5 mm, PG 64-22, PATCHING	6.00	TON
401030	SUPERPAVE TYPE B, PG 64-22, PATCHING	32.00	TON
401046	SUPERPAVE TYPE C, 9.5 mm, PG 76-22 (NON-CARBONATE STONE)	1,702.00	TON
401600	HMA/WMA ENVIRONMENTAL PRODUCT DECLARATION (EPD)	1.00	L.S.
401690	ENTRANCE, DRIVEWAY, AND INTERSECTING STREET PAVING AND MILLING SURCHARGE	100.00	TON
403000	BITUMINOUS CONCRETE AND/OR COLD-LAID BITUMINOUS (TRM) CONCRETE	21.00	TON
404001	BITUMINOUS CRACK AND JOINT SEALING LESS THAN 3/4-INCH WIDE	1,365.00	L.F.
602100	DRAINAGE INLET GRATE(S)	1.00	EACH
602101	DRAINAGE INLET FRAME(S)	1.00	EACH
602130	ADJUSTING AND REPAIRING EXISTING DRAINAGE INLET	25.00	EACH
602132	ADJUSTING AND REPAIRING EXISTING MANHOLE	5.00	EACH
602504	CONVERT EXISTING CATCH BASIN TO DRAINAGE INLET	1.00	EACH
701011	PCC CURB, TYPE 1-4	14.00	L.F.
701012	PCC CURB, TYPE 1-6	67.00	L.F.
705002	PCC SIDEWALK, 6"	596.00	S.F.
705009	PEDESTRIAN CONNECTION, TYPE 2, 3, AND/OR 4	699.00	S.F.

CENTRAL MAINTENANCE PAVEMENT & REHABILITATION, KENT II, (WHITELEYSBURG & VERNON), 2025

LOCATION 2 **VERNON RD (K60) FROM WHITELEYSBURG RD (K59) TO REESE AVE.**

LENGTH 1438.6560 m 4720.0000 L.F. AADT 6136

GENERAL IMPROVEMENTS

ADA IMPROVEMENTS, 2" MILL, PAVEMENT PATCHING AND 2" TYPE C FULL WIDTH OVERLAY.

COMMENTS:

Please see attached sheets for comments

MATERIAL ESTIMATE FOR LOCATION 2

705013	TRUNCATED DOME DETECTABLE WARNING SURFACE	91.00	S.F.
705532	PEDESTRIAN CONNECTION REPAIR	5.00	HOUR
709502	TRENCH DRAIN, 8" WIDE	150.00	L.F.
710002	ADJUST WATER VALVE BOXES	8.00	EACH
760010	PAVEMENT MILLING, BITUMINOUS CONCRETE PAVEMENT	47,267.00	SY-IN
762000	SAW CUTTING, BITUMINOUS CONCRETE	1,365.00	L.F.
762001	SAW CUTTING, CONCRETE, FULL DEPTH	90.00	L.F.
763501	CONSTRUCTION ENGINEERING	1.00	L.S.
763621	CONSTRUCTION ENGINEERING, REHABILITATION	10.00	HOUR
803001	PROVIDE AND MAINTAIN PORTABLE CHANGEABLE MESSAGE SIGN	98.00	EA-DY
808002	PROVIDE AND MAINTAIN TRUCK MOUNTED ATTENUATOR, TYPE II	20.00	EA-DY
811002	FLAGGER, KENT COUNTY	400.00	HOUR
811014	FLAGGER, KENT COUNTY, OVERTIME	60.00	HOUR
818001	SUPPLY OF ROADSIDE FLAT SHEET ALUMINUM SIGN PANEL, TYPE IV, RETROREFLECTIVE SHEETING	57.00	S.F.
818003	SUPPLY OF ROADSIDE FLAT SHEET ALUMINUM SIGN PANEL, TYPE XI, RETROREFLECTIVE SHEETING	39.00	S.F.
819001	PROVIDE GALVANIZED TELESCOPING SIGN POST	5.00	EACH
819002	INSTALL OR REMOVE GALVANIZED TELESCOPING SIGN POST	10.00	EACH
819003	INSTALL OR REMOVE TRAFFIC SIGNS	37.00	EACH
860004	TEMPORARY MARKINGS, LATEX, 4"	31,300.00	L.F.
860007	TEMPORARY PAVEMENT STRIPING, LATEX, SYMBOL/LEGEND	1,414.00	S.F.
861001	PERMANENT PAVEMENT STRIPING, EPOXY RESIN PAINT, 6"	15,650.00	L.F.

CENTRAL MAINTENANCE PAVEMENT & REHABILITATION, KENT II, (WHITELEYSBURG & VERNON), 2025

LOCATION 2 **VERNON RD (K60) FROM WHITELEYSBURG RD (K59) TO REESE AVE.**

LENGTH 1438.6560 m 4720.0000 L.F. AADT 6136

GENERAL IMPROVEMENTS

ADA IMPROVEMENTS, 2" MILL, PAVEMENT PATCHING AND 2" TYPE C FULL WIDTH OVERLAY.

COMMENTS:

Please see attached sheets for comments

MATERIAL ESTIMATE FOR LOCATION 2

862002	PERMANENT PAVEMENT STRIPING, ALKYD-THERMOPLASTIC, 6"	108.00	L.F.
862006	PERMANENT PAVEMENT STRIPING, ALKYD-THERMOPLASTIC, SYMBOL/LEGEND	707.00	S.F.
863002	PREFORMED RETROREFLECTIVE MARKINGS, ALKYD-THERMOPLASTIC, BIKE SYMBOL	5.00	EACH
867001	SNOWPLOWABLE RAISED PAVEMENT MARKER	88.00	EACH
905004	INLET SEDIMENT CONTROL, DRAINAGE INLET	5.00	EACH
908001	TOPSOIL	135.00	TON
908004	TOPSOIL, 6" DEPTH	126.00	S.Y.
908014	PERMANENT GRASS SEEDING, DRY GROUND	1,569.00	S.Y.
908026	EROSION CONTROL MULCH	1,569.00	S.Y.

LOCATION 2 **VERNON RD (K60) FROM WHITELEYSBURG RD (K59) TO REESE AVE.**

COMMENTS:

1. RECOMMENDED M.O.T. TYPICAL APPLICATION, TA-10 (TRAVEL LANES).
   TYPICAL APPLICATION, TA-17A OR 17B (STRIPING).
   TYPICAL APPLICATION, TA-29 (SIDEWALK).

2. DAYTIME WORK HOURS: 8:00A - 4:00P, (MONDAY AM - FRIDAY PM).

3. EXISTING R.O.W FOR THIS LOCATION IS 50' and 60' AS PER ARCHIVE PLANS;
   A. 21-045-01

4. THE GABC ITEM 301003 AND QUANTITY IS FOR UNIMPROVED DRIVEWAYS. CRUSHED CONCRETE AND MILLINGS SHALL NOT BE PERMITTED AS A SUBSTITUTE.

5. PLACE BITUMINOUS ASPHALT CONCRETE SAFETY EDGE AS PER THE STANDARD CONSTRUCTION DETAILS.

6. THE REMOVAL OF EXISTING RAISED PAVEMENT MARKERS SHALL BE INCIDENTAL TO THE MILLING OPERATION.

7. ALL PAVEMENT VERTICAL DIFFERENCES MUST BE ADDRESSED AT THE END OF EACH DAY IN ACCORDANCE WITH THE DELAWARE MANUAL ON TRAFFIC CONTROL DEVICES (DE-MUTCD-2011), CHAPTER 6, PAGE 6G-14, SECTION 6G.20 - VERTICAL DIFFERENCES.

8. INSTALL RAISED PAVEMENT MARKERS AS PER THE DELAWARE MANUAL ON TRAFFIC CONTROL DEVICES (DE-MUTCD-2011), CHAPTER 3, PAGE 3B-48, SECTION 3B-11 - RAISED PAVEMENT MARKERS - GENERAL.

9. TRENCH DRAIN ACROSS FROM TAYLOR MESSICK

   A. REPLACE EXISTING SLOTTED DRAIN @ 8611 VERNON RD (ACROSS FROM MESSICK & TAYLOR) WITH 8" TRENCH LINE DRAIN SYSTEM, ITEM 709502; APPROX. 150FT LENGTH, TYPE "A" GRATE UNBOLTED.

   B. CONSTRUCTION OF DRAINAGE SYSTEM SHALL BE AS DIRECTED BY THE FIELD ENGINEER WITH ALL WORK TO COMPLETE THE INSTALLATION, INCLUDING THE TIE-IN TO THE EXISTING 12" RCP LINE AND CLEANOUT OF THE REMAINING 12" RCP (APPROX. 120FT), SHALL BE INCIDENTAL.

THIS LOCATION SHALL MEET THE TOLERANCES OF SUBSECTION 401580 - RIDE QUALITY OF HOT-MIX PAVEMENT REQUIREMENTS, AS SPECIFIED IN THE SPECIAL PROVISIONS.

CONTRACT QUANTITIES SUMMARY SHEET

201000	CLEARING AND GRUBBING	1.00	L.S.
202000	EXCAVATION AND EMBANKMENT	122.00	C.Y.
211001	REMOVAL OF PORTLAND CEMENT CONCRETE PAVEMENT, CURB AND SIDEWALK	193.00	S.Y.
301001	GABC	27.00	C.Y.
301002	GABC, PATCHING	12.00	C.Y.
301003	GABC	104.00	TON
401005	SUPERPAVE TYPE C, 9.5 mm, PG 64-22 (CARBONATE STONE)	15,722.00	TON
401029	SUPERPAVE TYPE C, 9.5 mm, PG 64-22, PATCHING	6.00	TON
401030	SUPERPAVE TYPE B, PG 64-22, PATCHING	55.00	TON
401046	SUPERPAVE TYPE C, 9.5 mm, PG 76-22 (NON-CARBONATE STONE)	1,702.00	TON
401600	HMA/WMA ENVIRONMENTAL PRODUCT DECLARATION (EPD)	1.00	L.S.
401690	ENTRANCE, DRIVEWAY, AND INTERSECTING STREET PAVING AND MILLING SURCHARGE	462.00	TON
403000	BITUMINOUS CONCRETE AND/OR COLD-LAID BITUMINOUS (TRM) CONCRETE	142.00	TON
404001	BITUMINOUS CRACK AND JOINT SEALING LESS THAN 3/4-INCH WIDE	6,095.00	L.F.
602100	DRAINAGE INLET GRATE(S)	1.00	EACH
602101	DRAINAGE INLET FRAME(S)	1.00	EACH
602130	ADJUSTING AND REPAIRING EXISTING DRAINAGE INLET	25.00	EACH
602132	ADJUSTING AND REPAIRING EXISTING MANHOLE	5.00	EACH
602504	CONVERT EXISTING CATCH BASIN TO DRAINAGE INLET	1.00	EACH
701011	PCC CURB, TYPE 1-4	14.00	L.F.
701012	PCC CURB, TYPE 1-6	67.00	L.F.
705002	PCC SIDEWALK, 6"	659.00	S.F.
705009	PEDESTRIAN CONNECTION, TYPE 2, 3, AND/OR 4	699.00	S.F.
705013	TRUNCATED DOME DETECTABLE WARNING SURFACE	91.00	S.F.
705532	PEDESTRIAN CONNECTION REPAIR	5.00	HOUR
709502	TRENCH DRAIN, 8" WIDE	150.00	L.F.
710002	ADJUST WATER VALVE BOXES	8.00	EACH

CONTRACT QUANTITIES SUMMARY SHEET

760010	PAVEMENT MILLING, BITUMINOUS CONCRETE PAVEMENT	288,547.00	SY-IN
762000	SAW CUTTING, BITUMINOUS CONCRETE	6,095.00	L.F.
762001	SAW CUTTING, CONCRETE, FULL DEPTH	110.00	L.F.
763000	INITIAL EXPENSE/DE-MOBILIZATION	LUMP	SUM
763501	CONSTRUCTION ENGINEERING	1.00	L.S.
763621	CONSTRUCTION ENGINEERING, REHABILITATION	10.00	HOUR
801500	MAINTENANCE OF TRAFFIC, REHABILITATION	LUMP	SUM
803001	PROVIDE AND MAINTAIN PORTABLE CHANGEABLE MESSAGE SIGN	378.00	EA-DY
808002	PROVIDE AND MAINTAIN TRUCK MOUNTED ATTENUATOR, TYPE II	100.00	EA-DY
811002	FLAGGER, KENT COUNTY	2,000.00	HOUR
811014	FLAGGER, KENT COUNTY, OVERTIME	300.00	HOUR
818001	SUPPLY OF ROADSIDE FLAT SHEET ALUMINUM SIGN PANEL, TYPE IV, RETROREFLECTIVE SHEETING	345.00	S.F.
818003	SUPPLY OF ROADSIDE FLAT SHEET ALUMINUM SIGN PANEL, TYPE XI, RETROREFLECTIVE SHEETING	171.00	S.F.
819001	PROVIDE GALVANIZED TELESCOPING SIGN POST	41.00	EACH
819002	INSTALL OR REMOVE GALVANIZED TELESCOPING SIGN POST	78.00	EACH
819003	INSTALL OR REMOVE TRAFFIC SIGNS	186.00	EACH
860004	TEMPORARY MARKINGS, LATEX, 4"	294,462.00	L.F.
860007	TEMPORARY PAVEMENT STRIPING, LATEX, SYMBOL/LEGEND	2,382.00	S.F.
861001	PERMANENT PAVEMENT STRIPING, EPOXY RESIN PAINT, 6"	147,231.00	L.F.
862002	PERMANENT PAVEMENT STRIPING, ALKYD-THERMOPLASTIC, 6"	108.00	L.F.
862006	PERMANENT PAVEMENT STRIPING, ALKYD-THERMOPLASTIC, SYMBOL/LEGEND	1,191.00	S.F.
863002	PREFORMED RETROREFLECTIVE MARKINGS, ALKYD-THERMOPLASTIC, BIKE SYMBOL	5.00	EACH
867001	SNOWPLOWABLE RAISED PAVEMENT MARKER	694.00	EACH
905004	INLET SEDIMENT CONTROL, DRAINAGE INLET	5.00	EACH
908001	TOPSOIL	1,440.00	TON

CONTRACT QUANTITIES SUMMARY SHEET

908004	TOPSOIL, 6" DEPTH	126.00	S.Y.
908014	PERMANENT GRASS SEEDING, DRY GROUND	15,489.00	S.Y.
908026	EROSION CONTROL MULCH	15,489.00	S.Y.